LAMPIRAN

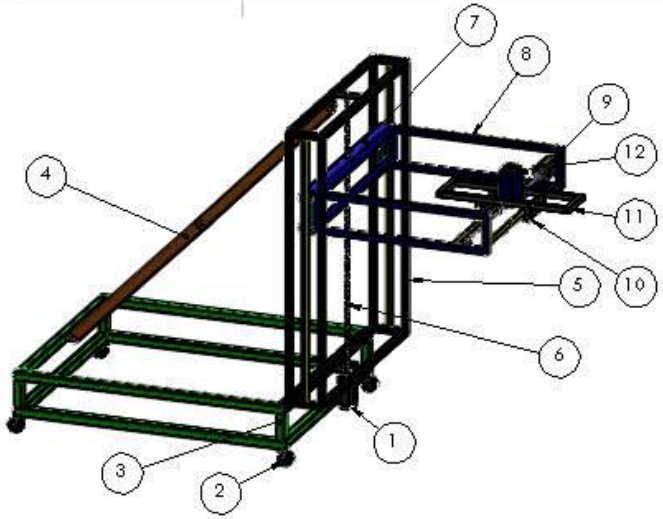

No.	NAMA BAGIAN
1	stepper
2	kaki roda
3	meja dasar
4	tiang penyangga
5	meja kerja
6	poros ulir
7	besi siku
8	tiang kamera
9	stepper
10	bearing
11	dudukan kamera
12	kamera

UNLESS OTHERWISE SPECIFIED:
DIMENSIONS ARE IN MILLIMETERS
SURFACE FINISH:
TOLERANCES:
LINEAR:
ANGULAR:

FINISH:

28 mei 2013

DEBUR AND BREAK SHARP EDGES

DO NOT SCALE DRAWING

REVISION

	NAME	SIGNATURE	DATE
DRAWN			
CHK'D			
APPV'D			
MFG			
Q.A			

TITLE:

Struktur Mekanik Sistem Inspeksi Visi

MATERIAL:

ASTM A 500

WEIGHT:

DWG NO.

01

A4

SCALE:1:5

SHEET 2 OF 2

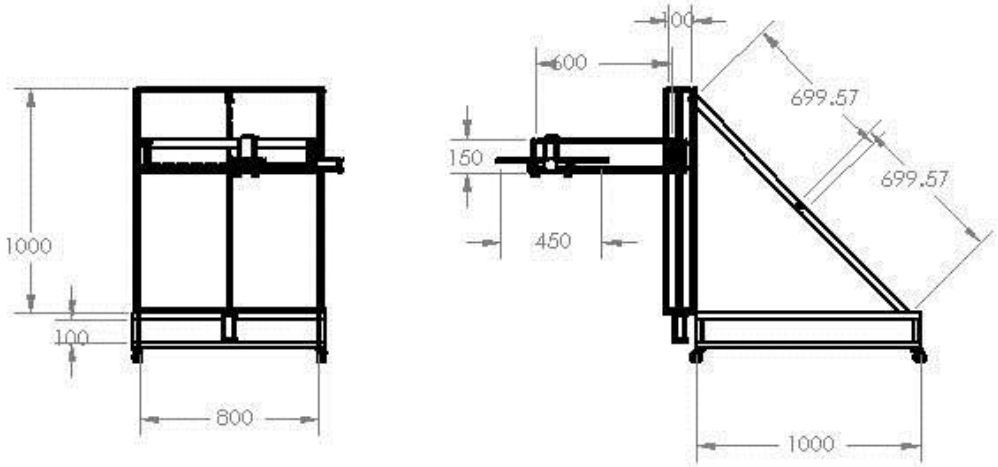

UNLESS OTHERWISE SPECIFIED: DIMENSIONS ARE IN MILLIMETERS SURFACE FINISH: TOLERANCES: LINEAR: ANGULAR:	FINISH:	DEBUR AND BREAK SHARP EDGES	DO NOT SCALE DRAWING	REVISION	
	NAME	SIGNATURE	DATE	TITLE: struktur mekanik sistem inspeksi visi	
DRAWN					
CHK'D					
APPV'D					
MFG					
Q.A				MATERIAL: ASTM A500	DWG NO. A4
				WEIGHT:	SCALE: 1:5 SHEET 2 OF 2

ASTM A500 Steel, grade A, Round Structural Tubing

Categories: Metal; Ferrous Metal; ASTM Steel; Carbon Steel; Low Carbon Steel

Material Notes: The Cu content of 0.18% is a minimum content when copper steel is specified.

Key Words: copper steels, copper-steel, UNS K03000, ASTM A501

Vendors: No vendors are listed for this material. Please click here if you are a supplier and would like information on how to add your listing to this material.

Printer friendly version | Download as PDF | Download to Excel (requires Excel and Windows)
Export data to your CAD/FEA program

Add to Folder: My Folder 0/0

Physical Properties	Metric	English	Comments
Density	7.85 g/cc	0.284 lb/in³	Typical of ASTM Steel

Mechanical Properties	Metric	English	Comments
Tensile Strength, Ultimate	310 MPa	45000 psi	
Tensile Strength, Yield	230 MPa	33400 psi	
Elongation at Break	25.0 %	25.0 %	in 50 mm (specified wall thickness 3.05 mm and larger)
Bulk Modulus	140 GPa	20300 ksi	Typical for steel
Shear Modulus	80.0 GPa	11600 ksi	Typical for steel

Component Elements Properties	Metric	English	Comments
Carbon, C	<= 0.30 %	<= 0.30 %	
Copper, Cu	0.18 %	0.18 %	
Iron, Fe	99.0 %	99.0 %	
Phosphorous, P	<= 0.050 %	<= 0.050 %	
Sulfur, S	<= 0.0630 %	<= 0.0630 %	

References for this datasheet

Carbon Steels A500 Grade A

Related Metals: 50W

Submit

Specifications: ASTM A500 Grade A
ASTM A501
UNS K03000

Physical Data

Density (lb / cu. in.)	0.284
Specific Gravity	7.9
Specific Heat (Btu/lb/Deg F - [32-212 Deg F])	0.107
Melting Point (Deg F)	2750
Thermal Conductivity	360
Mean Coeff Thermal Expansion	6.7
Modulus of Elasticity Tension	30
Modulus of Elasticity Torsion	11

Density (lb / cu. in.)	0.284
Specific Gravity	7.9
Specific Heat (Btu/lb/Deg F - [32-212 Deg F])	0.107
Melting Point (Deg F)	2750
Thermal Conductivity	360
Mean Coeff Thermal Expansion	6.7
Modulus of Elasticity Tension	30
Modulus of Elasticity Torsion	11

Item	Material	Yield Strength (ksi)	Maximum Von Mises Stress (ksi)	Von Mises Allowable stresses (ksi)	Allowable over Von Mises Ratio	Maximum Shear Stresses (ksi)	Maximum Shear Allowable stresses (ksi)	Maximum Shear over Von Mises Ratio	Maximum Deflection (mils)
Round bar, plates	A 36	36.0	3.3	12.0	3.6	1.7	6.0	3.5	0.9
Tube	A 500	46.0	5.8	15.3	2.6	3.3	7.7	2.3	4.2
Shoulder screws	B 18.3/ A 574	84.0	12.0	28.0	2.3	6.7	14.0	2.1	4.4

The Buckling Load Factor is 153.

http://en.Wikipedia.org/wiki/ASTM A500

Aluminum 2124-O

Categories: Metal; Nonferrous Metal; Aluminum Alloy; 2000 Series Aluminum Alloy

Material Notes: Data points with the AA note have been provided by the Aluminum Association, Inc. and are NOT FOR DESIGN.

Composition Notes:
A Zr + Ti limit of 0.20 percent maximum may be used with this alloy designation for extruded and forged products
Agreement may be indicated, for example, by reference to a standard, by letter, by order note, or other means wh
Composition information provided by the Aluminum Association and is not for design.

Key Words: Aluminium 2124-O; UNS A92124; QQ-A-250/29; ASTM B209; AMS 4101; AA2124-O

Vendors: No vendors are listed for this material. Please click here if you are a supplier and would like information on how to

Printer friendly version Download as PDF Download to Excel (requires Excel and Windows)
Export data to your CAD/FEA program

Physical Properties	Metric
Density	2.78 g/cc

Mechanical Properties	Metric
Modulus of Elasticity	73.0 GPa

Poissons Ratio	0.33
Shear Modulus	27.0 GPa

Electrical Properties	Metric
Electrical Resistivity	0.00000420 ohm-cm

Thermal Properties	Metric
CTE, linear	21.1 µm/m-°C @Temperature -50.0 - 20.0 °C
	22.9 µm/m-°C @Temperature 20.0 - 100 °C
	22.9 µm/m-°C @Temperature 20.0 - 100 °C
	23.8 µm/m-°C @Temperature 20.0 - 200 °C
	24.7 µm/m-°C @Temperature 20.0 - 300 °C
	24.7 µm/m-°C @Temperature 20.0 - 300 °C
Specific Heat Capacity	0.882 J/g-°C
Thermal Conductivity	193 W/m-K
Melting Point	502 - 638 °C
Solidus	502 °C
Liquidus	638 °C

Processing Properties	Metric
Annealing	413 °C

Temperature	
Solution Temperature	493 °C
Aging Temperature	191 °C

Component Elements Properties	Metric
Aluminum, Al	91.2 - 94.7 %
Chromium, Cr	<= 0.10 %
Copper, Cu	3.8 - 4.9 %
Iron, Fe	<= 0.30 %
Magnesium, Mg	1.2 - 1.8 %
Manganese, Mn	0.30 - 0.90 %
Other, each	<= 0.050 %
Other, total	<= 0.15 %
Silicon, Si	<= 0.20 %
Titanium, Ti	<= 0.15 %
Zinc, Zn	<= 0.25 %

References for this datasheet. http://www.matweb.com

Sifat Mekanik Beberapa Logam, Dan Paduan

Logam	Kekuatan luluh (psi(MPa)	Kekuatan tarik(Psi(Mpa)
Emas	-	19.000(130)
Aluminium	400(28)	10.000(69)
Tembaga	10.000(69)	29.000(200)
BESI	19.000 (130)	38.000 (262)
NIKEL	20.000 (138)	70.000 (480)
TITANIUM	35.000 (240)	48.000 (330)
MOLIB DENUM	82.000 (565)	95.000 (655)

Sumber : http://ft.unsada.ac.id/wp-content/uploads/2008/03/bab4-mt.pd

Termopol Termoton® K6GA4040A TPE

Categories: Polymer; Thermoplastic; Elastomer, TPE; Olefinic TPE; Styrenic TPE

Material Notes: Main Characteristics: Wide range of hardness; High strength elasticity; 100% recyclable; Easy
O, and weathering; Excellent resistance to several chemical agents like bases, acids, alcohols
PMMA, PS, SAN, TPU polymers; High elastic recovery within a wide temperature range; Soft
High thermal and electric insulation values; Good abrasion resistance; Many products meet F

Information provided by Termopol Termoplastik Elastomer

Vendors: No vendors are listed for this material. Please click here if you are a supplier and would like in

Printer friendly version Download as PDF Download to Excel (requires Excel and Windows)
Export data to your CAD/FEA program

Physical Properties	Metric	English
Density	1.08 g/cc	
Deformation	30 %	
	@Temperature 700 °C, Time 79200 sec	@Temper T

Mechanical Properties	Metric
Hardness, Shore A	40
Tensile Strength	2.20 MPa
Elongation at Break	550 %
100% Modulus	0.00140 GPa
300% Modulus	0.00180 GPa

Thermal Properties	Metric
Maximum Service Temperature, Air	110 °C
Minimum Service Temperature, Air	-50.0 °C
Flammability, UL94	V-0

Processing Properties	Metric	
Nozzle Temperature	175 °C	
Zone 1	150 °C	
Zone 2	160 °C	32
Zone 3	170 °C	
Mold Temperature	20.0 - 40.0 °C	
Drying Temperature	90.0 °C	
	@Time 7200 sec	@T
Back Pressure	0.340 MPa	
Screw Speed	25 - 75 rpm	

Descriptive Properties
Acid-Base Resistance
Alcohol Resistance
Compression Set
Injection Pressure
Injection Speed
Motor Oil Resistance
Plasticizing Speed
Solvent Resistance
UV-Ozone Stability

Foto struktur mekanik sistem inspeksi visi yang telah dibuat di Laboratorium Produksi Jurusan Teknik Mesin Fakultas Teknik Universitas Lampung.

Gambar Struktur mekanik pada posisi tidur

Gambar Struktur mekanik pada posisi berdiri

Pengujian dan pengambilan data

1. Mengukur kelurusan lintasan rel sumbu z dengan menggunakan dial indikator

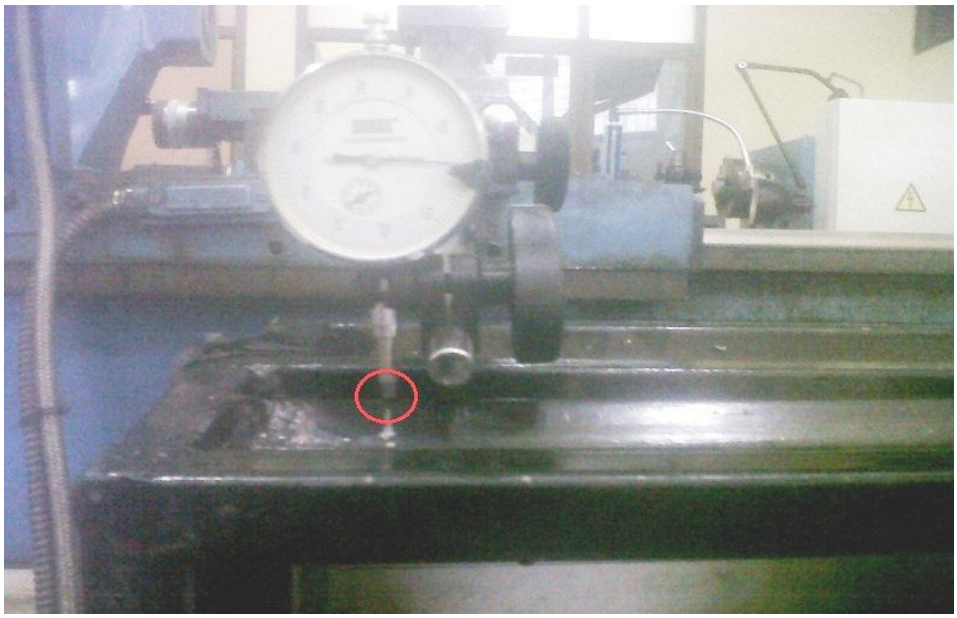

Gambar Pengukuran kelurusan lintasan rel sumbu z menggunakan dial indikator

2. Mengukur kelurusan lintasan rel sumbu x dengan menggunakan dial indikator

Gambar Pengukuran kelurusan lintasan rel sumbu x menggunakan dial indikator

2.Mengukur kesejajaran lintasan rel sumbu x dengan menggunakan jangka sorong

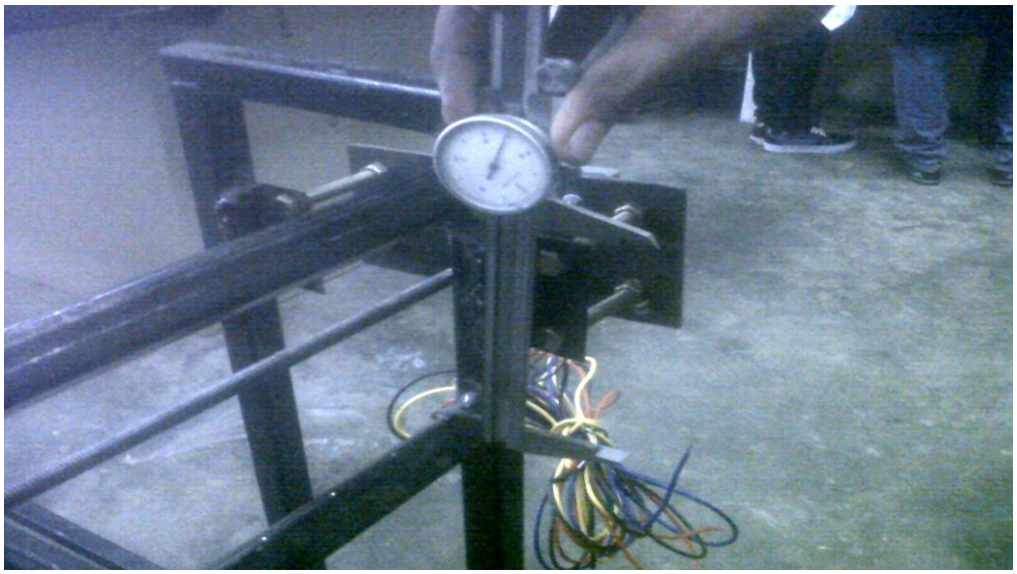

Gambar Pengukuran kelurusan lintasan rel sumbu x menggunakan jangka sorong